Independent Cable Tray Fixing Method

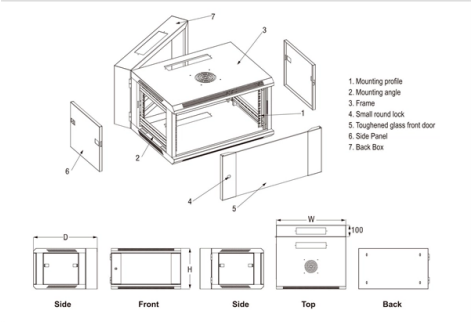

Overview

Best Fixing and Mounting Options for Cable Trays | CMWDiscover the best fixing and mounting options for cable trays and wire mesh basket trays. CMW shares.

Key Takeaways

Independent cable tray fixing involves using dedicated support structures such as wall brackets, floor stands, or ceiling hangers to securely mount trays without relying on existing building elements.

Overview

Independent cable tray fixing ensures that cable trays are mechanically supported and isolated from other structures, providing stability, safety, and flexibility for future modifications. This method is commonly used in industrial plants, electrical rooms, and service corridors where structural independence is required. Common Fixing MethodsWall-Mounted BracketsBrackets are anchored directly to walls using suitable fasteners.

Trays are attached to the brackets with bolts or clamps. Spacing between supports typically ranges from 1. 5 to 3 meters, depending on tray type and load.

Suspended Supports

Trays are hung from ceilings using threaded rods, hangers, or clevises. Rods are fixed to structural beams or concrete ceilings with anchors. This method allows trays to remain level and aligned over long runs.

© 2026 DOLPHIN FIBER SYSTEMS - All rights reserved

Floor Stands or Pedestals

Freestanding supports are used when wall or ceiling mounting is not feasible. Pedestals are designed to carry the tray load and maintain proper height. Ideal for open areas or plant rooms where trays cross walkways or equipment.

Center Supports

For long tray runs, intermediate supports prevent sagging. Can be combined with wall or ceiling mounts to maintain structural integrity.

Installation Best Practices

Material Inspection: Verify that trays, brackets, and fittings are free from damage and meet project specifications before installation. Alignment and Leveling: Ensure trays are straight, level, and properly connected using fittings such as bends, T-pieces, and reducers. Load Considerations: Calculate tray width and support spacing based on cable weight, type, and future expansion.

Corrosion Protection: Use galvanized or stainless steel trays and supports in environments prone to moisture or chemical exposure. Safety Compliance: Follow local electrical codes and standards (e.g., DIN EN 61537) to ensure safe and reliable installation.

Advantages of Independent Fixing

Provides structural independence, reducing stress on building elements. Facilitates easy maintenance and cable access. Allows flexible routing and future expansion without major modifications.

Enhances safety by preventing sagging or tray collapse. By following these methods and best practices, independent cable tray fixing ensures a durable, safe, and efficient cable management system suitable for industrial and commercial installations.

Article Content

Best Fixing and Mounting Options for Cable Trays | CMW

Discover the best fixing and mounting options for cable trays and wire mesh basket trays. CMW shares tips for efficient cable management.

Cable Tray Installation

Learn everything about cable tray installation with our complete guide. Discover types, steps, and safety tips for efficient electrical cable management.

Method Statement installation of Cable Trays and Ladders

© 2026 DOLPHIN FIBER SYSTEMS - All rights reserved

This method statement covers the site installation of the cable tray & ladders and the requirements of checks to be carried out.

A Guide to Installing and Supporting Electrical Cable Trays

This guide covers the critical steps, from selecting the right electrical cable tray and performing accurate cable fill calculations to managing a safe cable pull through

300mm Cable Tray Hanging & T-Joint Fixing in 60 Sec!

Learn the fastest way to hang & fix a 300mm cable tray T-joint! Perfect for electricians & engineers. ⚡ □□ Tools Used: - Cable tray brackets - Bolts/Nuts ...

INSTALLATION GUIDE

Cable or “P” clamps and plastic tie wraps are used to fasten cables/conductors to the ladder tray. Single conductors must be fastened to prevent excessive movement generated by fault current magnetic

Guide to cable support systems

Widths of 8 and 15 millimetres enable flexible adjustment to different cable trays, cable ladders and cable volumes. With the help of the matching SBV tightening strap locks and 576 spring chuck, the

Decoding Cable Tray Support Structures: Tips and Insights

Discover efficient cable tray support structures for optimal cable management. Learn about hanger, wall-mounted, and Unistrut systems for safer

Cable Tray Installation Procedure Guide

It describes inspecting and storing cable trays upon receipt, installing trays flat or vertically, fixing trays to structures, designing trays to carry loads, providing covers in areas with risk of damage, allowing

Cable tray manual

Instead of large conduits, cable channel may be used very effectively to support cable drops from the cable tray run to the equipment or device being serviced and is ideal for cable tray runs involving a

Installations of Cable Trays Method Statement – Your

Cable trays are easy to install, and since they come in different sizes, you can choose the right tray for your individual needs. But to install them properly on

300mm Cable Tray Hanging & T-Joint Fixing in 60 Sec!

© 2026 DOLPHIN FIBER SYSTEMS - All rights reserved

Learn the fastest way to hang & fix a 300mm cable tray T-joint! Perfect for electricians & engineers. ⚡ □□ Tools Used: □□ Like if this helped! □□ Subscribe for more electrical tips!

PDF document

PDF document PDF document Read this PDF document online, download the original file, and browse related details on device.report. Additional coding instructions can be found in the Article File chapter

unsupervised_topic_modeling/topics/en/15/100/100/topics at ...

Contribute to annontopicmodel/unsupervised_topic_modeling development by creating an account on GitHub.

Beama Best Practice Guide | Installation Of The System | Cable ...

The following recommendations are intended to be a practical guide to ensure the safe and proper installation of cable ladder and cable tray systems and channel support and other support systems.

Cable Tray Technical Guide A practical guide to product selection and ...

Cable Tray Technical Guide A practical guide to product selection and installation This guide for engineers and installers has been developed by ABB as a practical reference regarding cable tray

How to Install Cable Tray: A Comprehensive Guide to Different

Welcome to our step-by-step guide on installing cable trays! In this video, we''ll explore the different types of cable trays available and provide detailed instructions for their installation.

Mastering Cable Tray Installation | Step-by-Step Guide for a Seamless ...

Learn how to install cable trays correctly. Get the ultimate step-by-step guide on setting up a seamless and reliable cable management system.

Related Video Reference

This video was associated with the source search result. Verify technical details against current product documentation and project requirements.

© 2026 DOLPHIN FIBER SYSTEMS - All rights reserved

Contact Us

Continue your research online:

Website: https://dolphinspreschool.co.za
Technical inquiry: https://dolphinspreschool.co.za/project-desk.html
African project coordination: Waterfall City, Midrand, Gauteng, South Africa

This document is for preliminary research. Verify specifications against current standards, product documentation and project requirements.

© 2026 DOLPHIN FIBER SYSTEMS - All rights reserved