Fiber Optic Sensor Transmitter

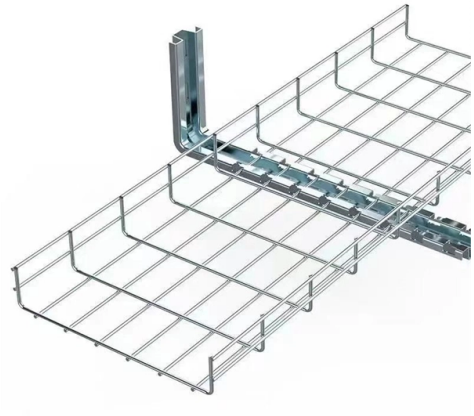

Overview

There are several types of fiber optic sensors. Detection methods include thrubeam, reflective, retro-reflective, and definite-reflective. Each method is used for different applications and targets.

Article Content

Fiber Optic Sensors

There are several types of fiber optic sensors. Detection methods include thrubeam, reflective, retro-reflective, and definite-reflective. Each method is used for different applications and targets.

Fiber-optic sensor

Extrinsic fiber-optic sensors use an optical fiber cable, normally a multimode one, to transmit modulated light from either a non-fiber optical sensor, or an electronic sensor connected to an optical transmitter. A major benefit of extrinsic sensors is their ability to reach places which are otherwise inaccessible. An example is the measurement of temperature inside aircraft jet engines by using a fiber to transmit radiation into a radiation pyrometer located outside the engine. Extrinsic sensors can also be used in the same w

FIBER-OPTIC SENSORS

The E3NX-FA amplifier is best choice for most challenging fiber applications in terms of long sensing distance, minute object detection or high speed processes.

© 2026 DOLPHIN FIBER SYSTEMS - All rights reserved

1052-082-01 Fiber Optic Coaxial Thermocouple Probe / Sensor 7′ X 3/4″

$ 35.00 6 in stock 1052-082-01 Fiber Optic Coaxial Thermocouple Probe / Sensor 7'' X 3/4" quantity Add to cart SKU: 100FOCTPS7X34Categories: CONTROLS, Temperature, TRANSMITTERS Tag: OUT3

DwyerOmega | Shop for Sensing, Monitoring and

Explore DwyerOmega''s comprehensive range of industrial sensing, monitoring, and control solutions from thermocouples to pressure transducers engineered for

Brand New E32-T12F Amplifier Separated Beam Type Fiber Unit Axial ...

Key attributes Connector Style Direct output Mode Through-beam type Simplex/Duplex Duplex (Transmitter and Receiver) Fastener type Through-hole mounting clip / nut fixation Cable diameter

outlines two alternatives of using the FO insulator

As a result, the monitoring system must correctly and accurately record this response. Most modern monitoring systems use fiber-optic sensors. Embedding

Fiber-optic communication

Modern fiber-optic communication systems generally include optical transmitters that convert electrical signals into optical signals, optical fiber cables to carry the

Bendrich Optical Fiber Sensor Bus Unit 780520 6x (24 V/ 5 mA)

Without_Title_1 sensor bus unit Type 780520 Used, from a warehouse clearance Sensor module power supply +24 V ± 15% Number of inputs 6 (24 V/ 5 mA) Data transmission fiber optics (receiver and

What is a Fiber Optic Sensor?

A fiber optic sensor operates with an optical fiber cable connected to a dedicated light source. These sensors offer great mounting flexibility and can be used is in

Fiber Optic Sensors

Fiber optic sensors are compact because the detection circuit is located in the amplifier, allowing for detection even in narrow spaces. Installation and

Fiber Optic Sensors: Fundamentals, Principles & Applications

Extrinsic Fiber Optic Sensors Fiber is Only an Information Carrier To and From a Black Box Light Signal Generation in Black Box Depending on the Arriving Information

Sensors for Fiber-Optic Networks | DigiKey

© 2026 DOLPHIN FIBER SYSTEMS - All rights reserved

Increasingly, lower cost plastic fiber is being used with more cost-effective sensors providing the last mile connection for the telecom networks to

Fiber optic sensors and fiber optics | Baumer international

A fiber optic sensor and two fiber optics made of plastic or glass fibers make up a fiber optic system. The sensor contains a light source (transmitter), typically an

VIAVI Solutions | Network Test, Monitoring, and Assurance

Our test, monitoring, assurance, and resilient position, navigation and timing solutions enable and secure critical infrastructure ranging from data center

Fiber Sensors

Fiber Sensors almost always use LEDs as the light source. The light emitted from LEDs oscillates in the vertical and horizontal directions and is referred to as

FOT-CC-1300-SM-ST Transmitter by ULTRA ELECTRONICS

FOT-CC-1300-SM-ST CURTISS WRIGHT from FIBER OPTIC TRANSMITTER, FOT-CC SERIES, 24 VDC, 1300 NM, SINGLE-MODE, DRY CONTACT INPUT, ST TYPE OPTICAL CONNECTOR

Fiber-optic sensor

A fiber-optic sensor is a sensor that uses optical fiber either as the sensing element ("intrinsic sensors"), or as a means of relaying signals from a remote sensor to the electronics that process the signals

Related Video Reference

This video was associated with the source search result. Verify technical details against current product documentation and project requirements.

Additional source notes

Extrinsic fiber-optic sensors use an , normally a one, to transmit light from either a non-fiber optical sensor, or an electronic sensor connected to an optical transmitter. A major benefit of extrinsic sensors is their ability to reach places which are otherwise inaccessible. An example is the measurement of temperature inside by using a fiber to transmit into a radiation located outside the engine. Extrinsic sensors can also be used in the same w…

© 2026 DOLPHIN FIBER SYSTEMS - All rights reserved

Contact Us

Continue your research online:

Website: https://dolphinspreschool.co.za
Technical inquiry: https://dolphinspreschool.co.za/project-desk.html
African project coordination: Waterfall City, Midrand, Gauteng, South Africa

This document is for preliminary research. Verify specifications against current standards, product documentation and project requirements.

© 2026 DOLPHIN FIBER SYSTEMS - All rights reserved