Explosion-proof outdoor power distribution box

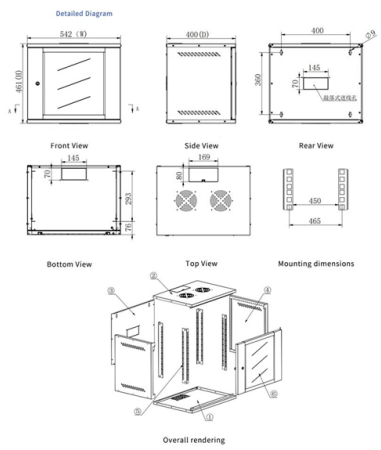

Overview

An explosion-proof distribution box is an enclosure designed and certified to contain an internal explosion and prevent flame propagation to the external atmosphere; it is required in hazardous zones where flammable gases or dust are present and local regulations or industry standards. An explosion-proof distribution box is an enclosure designed and certified to contain an internal explosion and prevent flame propagation to the external atmosphere; it is required in hazardous zones where flammable gases or dust are present and local regulations or industry standards. Flameproof and explosion proof, these power overhaul distribution boxes are suitable for use in hazardous areas. Main switch: Maximum current is 180A. Branch circuit: Maximum current is 6~95A CLICK FOR CZ SPECSI draw on 15 years in industrial connectors to explain how to specify, install, and maintain explosion-proof distribution boxes for hazardous areas, covering selection criteria, certification (ATEX, IECEx), enclosure ratings, wiring practices, and lifecycle testing; I compare standard enclosures to. These are available in a range of materials including Stainless Steel, GRP & Sheet Steel from IP42 (Indoor) to IP 66 (Outdoor) Applications. Extol International are the leading suppliers of Control Panels & Distribution Boards for hazardous areas and explosive atmospheres – a comprehensive range of. Durable Hexlon Explosion Proof Distribution Boxes and Electrical Enclosures, IECEx and ATEX certified for Zone 1 and Zone 2. They play a pivotal role in ensuring the reliable flow of power, serving as the backbone of electrical. Pepperl+Fuchs provides a specialized portfolio of Ex d (flameproof) and Ex tb (dust protection by enclosure) certified terminal boxes and junction boxes engineered for reliable use in explosion-hazardous areas. These sturdy solutions are certified according to global standards such as ATEX, IECEx.

© 2026 DOLPHIN FIBER SYSTEMS - All rights reserved

Article Content

Explosion Proof Power Distribution Boxes

Flameproof and explosion proof, these power overhaul distribution boxes are suitable for use in hazardous areas. Specs: Ex mark: Ex de ⅡC T4 Gb DIP A21

Explosion-Proof Distribution Boxes for Hazardous Areas

Expert guidance on specifying, installing, and maintaining explosion-proof distribution box solutions for hazardous areas. Learn best practices, standards (ATEX, IECEx), connector selection,

DISTRIBUTION BOARDS

These are available in a range of materials including Stainless Steel, GRP & Sheet Steel from IP42 (Indoor) to IP 66 (Outdoor) Applications.

Explosion Proof Distribution Box & Electrical Enclosures

Durable Hexlon Explosion Proof Distribution Boxes and Electrical Enclosures, IECEx and ATEX certified for Zone 1 and Zone 2.

Outdoor Explosion Proof Distribution Boxes

Outdoor explosion proof distribution boxes from reliable suppliers. Durable, waterproof, and IP66/67 rated for harsh environments. Wholesale and OEM available.

Terminal and Junction Boxes (Ex d) | Explosion Protection

Pepperl+Fuchs provides a specialized portfolio of Ex d (flameproof) and Ex tb (dust protection by enclosure) certified terminal boxes and junction boxes engineered for reliable use in explosion

Ex Local Control Stations & Distribution Boxes

Atex control stations, explosion protected control units and distribution boxes made stainless steel maritime grade AISI 316L or AISI 304L. Atex Delvalle provides a

CE92 Explosion-proof power distribution boxes

Contact our experts or request a quote today. Main switch:Maximum current is 180A. Branch circuit:Maximum current is 100A.

Electrical equipment in hazardous areas

Explosion-proof or flame-proof equipment is sealed and rugged, such that it will not ignite a hazardous atmosphere, despite any sparks or explosion within. Several techniques of flame-proofing exist,

© 2026 DOLPHIN FIBER SYSTEMS - All rights reserved

Intelligent Explosion-Proof Power Distribution Box Multi-Specification ...

A professional manufacturer of explosion-proof products, established in 2010, and our factory moved to Yushan Economic Development Zone in 2018. Our factory has its own R&D center, casting

Hubbell Incorporated | Electrify & Energize

Hubbell Incorporated is a leading manufacturer of utility and electrical solutions enabling customers to operate critical infrastructure safely, reliably, and efficiently.

Quality Choice Explosion-Proof Distribution Box for Hazardous Areas ...

Outdoor, Industrial, Indoor, Electric Power TransmissionApplication IP55IP Level Distribution Box, LV Switchgear CabinetType 8, 6, 20, 12, 24, 16Number of Sockets Place of Origin:Zhejiang, China Lock

Factory Direct China Stainless Steel Poliester Distribution Box ...

Key attributes Rated Voltage 220V ~ 480V Rated Current 400A ~ 6300A Application Outdoor, Industrial, Indoor, Electric Power Transmission Number of Sockets 6, 8, 12, 24, 16, 20 Place of Origin Zhejiang,

Distribution Box Outdoor 380 V IP54 Steel Cabinet For Power

This robust explosion-proof electrical equipment container cabinet is engineered for safe and reliable operation in demanding outdoor environments. Ideal for housing generators, distribution systems,

Nepal Zhengding Power Distribution Box Manufacturer

Jual Beli Nepal Zhengding Power Distribution Box Manufacturer terbaik untuk bisnis anda. Bandingkan Penawaran harga termurah dari berbagai penjual terbaik di marketplace dan direktori bisnis

Outdoor Power Distribution Boxes: The Backbone of

Discover how J&HW Group''s outdoor power distribution boxes deliver safe, weatherproof, and customizable solutions for modern industrial and

SW-MC ATEX Explosion Proof Power Supply

SW-MC ATEX Explosion Proof Power Supply Distribution Box Series:SW-MC Material:Polycarbonate IP Rating:IP65 NEMA Rating:4X Color:Light Grey

Explosion proof Power Distribution Panel Box

Power Distribution panel box - Hazardous locations for explosive gas mixtures: Zone 1 and Zone 2. Explosive gas mixtures: Class IIA, IIB, and IIC.

© 2026 DOLPHIN FIBER SYSTEMS - All rights reserved

Contact Us

Continue your research online:

Website: https://dolphinspreschool.co.za
Technical inquiry: https://dolphinspreschool.co.za/project-desk.html
African project coordination: Waterfall City, Midrand, Gauteng, South Africa

This document is for preliminary research. Verify specifications against current standards, product documentation and project requirements.

© 2026 DOLPHIN FIBER SYSTEMS - All rights reserved